REV.	REVISIONS DESCRIPTION	DATE	APPROVED
-	INITIAL RELEASE	8/12/2010	E. TANGEN

DIMENSIONS ARE IN INCHES, UNLESS OTHERWISE SPECIFIED. TOLERANCES ARE:		SIGNATURES		DATE
DEC.XX=±.020	FRAC.±	ORIG.	E. TANGEN	8/12/2010
.XXX=±.005	ANG.±	MFG.		
.XXXX=±.0020		ENG.		
REMOVE BURRS, BREAK SHARP EDGES		QA.		
MATERIAL: SEE NOTES				
FINISH: SEE NOTES				

TriQuint SEMICONDUCTOR
500 W Renner Road
Richardson, Texas
32860-9501
Tel: (972) 994-3727

SALES PCB FOR, TGA4532/3-SM
EVALUATION BOARD ASSEMBLY

SIZE	DWG.NO.	REV
A	9xxxxx	--

SCALE: NONE | PCB ASSY, TGA4532/3-SM | SHEET 1 OF 2

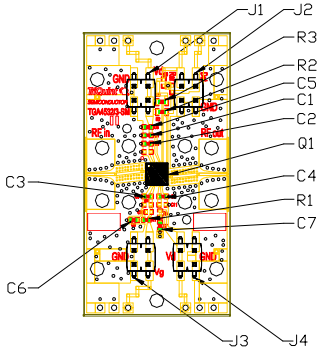

Bill of Materials

Ref. Name	Value/Type	Size	Quantity
--	TGA4532/3-SM_EVB Evaluation Board	--	1
Q1	TGA4532-SM or TGA4533-SM	Q1	1
J1,J2,J3,J4	FCI Bergstik II Header DR 0.100" cc Duplex Vert. SMT Headers (2x2) (or Equivalent)	--	2
C1, C2, C3, C4	100 pF 50V NPO SMD Ceramic Capacitor	0402	4
C5, C6, C7	1 uF 50V COG SMD Ceramic Capactor	0402	3
R1	15 ohm 1/16 W 5% SMD Resistor	0402	1
R2,R3	40 Kohm 1/16 W 5% SMD Resistor	0603	2

SIZE	DWG.NO.	REV
A	9xxxxx	--

SCALE: NONE | PCB ASSY, TGA4532/3-SM | SHEET 2 OF 2