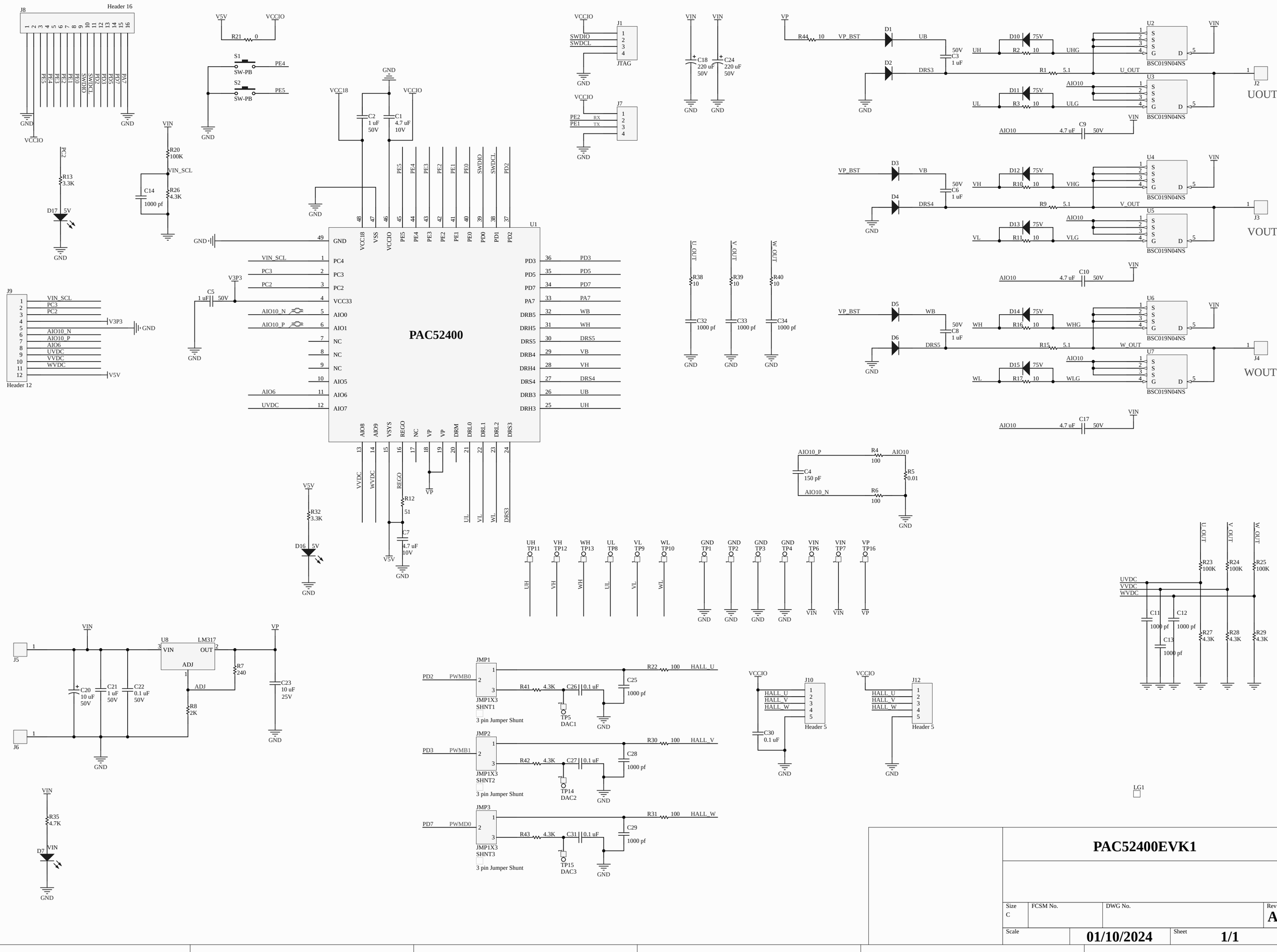

PAC52400EVK1

Size	FCSM No.	DWG No.	Rev
C			A

Scale		Sheet
	01/10/2024	1/1